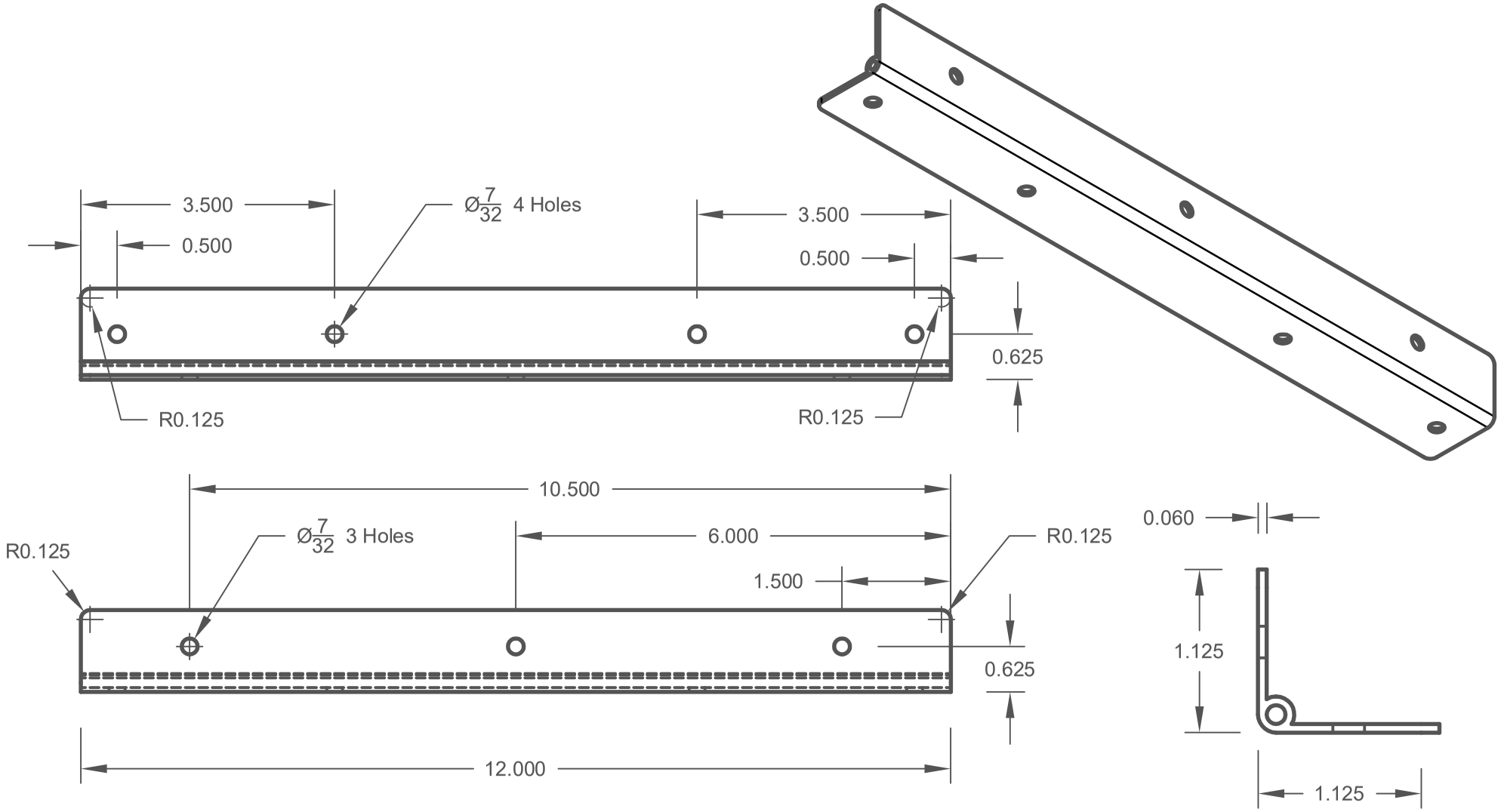

Material: 2" x 0.06" x $\frac{1}{8}$". Continuous hinge, steel, paint grey
Deburr and break all sharp edges
All dimension are in inches

Date: Jun-28-17	By: F. Dyer	Drawing: S 158
Description: **Hinge**		Sheet: 1 of 1